CARVEC Systems

G-Lock (Gimbal Lock) System

'Radian' Upgrade Version User Manual

Issue 1.3

Overview 3
Module Pin Assignments 4
LED Indications 4
Green 4
Yellow 5
Configuring the G-Lock 6
Configuration Software Display Windows 6
Setting the Mode Channel 9
Configuration Window - General Settings 10
I/O Configuration Section 10
Slewing Angles and Rates section 11
Slew Rate 11
Slewing Mode 11
Test Mode 12
Options 12
Additional Options for the Pan Channel 13
Restart 15
Sw Version 15
RC Channel Selection and Priority 15
Preconditions 17
Mount the G-Lock to the gimbal 17
Disable unused axis 17
Set the Slewing Mode 17
Select the Input Channels from the radio 17
Power-up and Tune 18
Guide to Setting Up a G-Lock with a CARVEC Signal-Master Module 18
FAQ 21
What is the operating voltage for the module ?. 21
How do I check the G-Lock is configured correctly for the way I have mounted it ? 21
How do I use a dial on the radio to adjust the gain in real-time ? 21
How Do I Reset a G-Lock to the Factory-Defaults ?. 22
Common Problems & Solutions 23
When I operate the tilt, the roll axis also changes slightly. 23
I am not using a Signal-Master module and I am not getting any Pan or Tilt servo output 23
The gimbal servos drive constantly as soon as I apply power to the Signal-Master module 23
I can’t see any input from the G-Lock on the Signal-Master display 23
Appendix A – Wiring diagram for a standalone G-Lock 24
Appendix B – Wiring diagram for the G-Lock with a CARVEC Signal-Master module 25
Appendix C – PC connection using the CARVEC USB Adapter 26
Adapter hardware connection and pin-out 26
Configuring the Adapter to automatically install as COM10: 26
Changing the PC software to use a different COM port 27
Verifying the PC software connection 27
Appendix D – Entering bootloader mode for firmware upgrade 28

Overview

CARVEC Systems (the original designers of the market-leading 'Radian') have been developing and improving the system. More than 75% of the software has been reworked or re-written to produce a new system called the CARVEC G-Lock.

The G-Lock will be available in a new processor module which improves and adds to the Radian design. However, the main stabilisation system has also been developed to work in the existing 'Radian' modules by increasing the processor speed by 25% and optimising or rewriting existing software.

New - 2-axis (Tilt/Roll) or 3-axis (Pan/Tilt/Roll) stabilisation from a single module

New - 'Proportional' mode to set gimbal angles using a dial or shoulder lever

New - User-configurable slew acceleration control to smooth out camera operator inputs and give professional looking movements.

New - Remote gain adjustment for any or all of the 3-axis

New - CARVEC High-Speed Link (HSL) mode allows a module to be mounted in a remote location (eg under the camera tray) without any wire bundles to impede gimbal movement. A thin 4-core cable connects it to an optional CARVEC Signal-Master module. The two spare connections can be used as general purpose servo outputs – eg camera trigger giving minimal wiring across the rotating gimbal axis.

New -Supports Brushless-Motor Gimbal drive systems using the CARVEC BLD Modules.

New -Supports a Pan axis 'Follow Mode' to automatically maintain the pan axis angle relative to the aircraft whilst maintaing smooth stabilisation.

Improved - Supports SBUS-2 receivers.

New - option to load + save configurations from a file. Allows quick reconfiguration and resetting back to factory-defaults.

All existing Radian modules are capable of being upgraded to the CARVEC G-Lock standard.

Module Pin Assignments

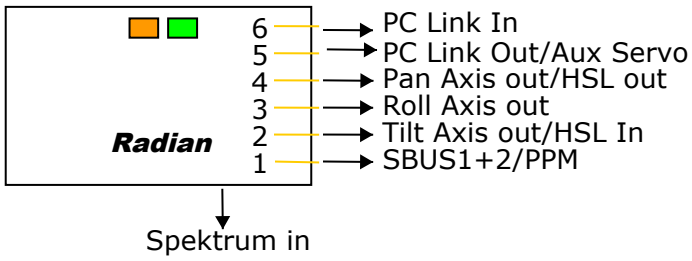

Port 1: Connect an SBUS1, SBUS2 or PPM receiver here.

Port 2: Servo output for the Tilt axis stabilisation or a direct output of any input channel. This pin also serves as the HSL-In pin for connection to the Signal-Master or BLD modules.

Port 3: Servo output for the Roll axis stabilisation or a direct output of any input channel.

Port 4: Servo output for the Pan axis stabilisation (3-axis version only) or a direct output of any input channel or the high-speed link output to the Signal-Master and BLD modules.

Port 5 : Auxiliary servo pulse output : can be configured to output a servo pulse for a camera trigger etc when all 3 servo outputs are used for stabilisation.

Port 5+6: Connection to the USB dongle for configuration + firmware updates.

Spektrum In : Port for Spektrum Satellite receiver. Supports DSM, DSM2 and DSMX.

LED Indications

Green

Fast Flash = IMU Aligning. Keep module stationary until complete.
Solid = Module running normally
Slow Flash = One or more of the output drives (for any enabled axis) has been turned off eg. Pan axis off in ‘fixed position’ mode or a motor drive initialisation failed.

Yellow

Fast Flash = One or motors are in the drive initialisation phase
Solid = RC Radio input stream is valid
Slow Flash = IMU internal self-test failure.

Configuring the G-Lock

The G-Lock module can perform stabilisation for all 3 axis of a camera gimbal. Each axis operates more or less independently of the others apart from a few common settings.

The easiest way to set the system up is to do one axis at a time whilst the untuned axis are disabled. The usual method is to tune the roll axis, then tune the tilt axis (while it is working on a tuned roll axis) then finally add the pan axis.

Note: Most buttons and parameters have help text which will appear if you hold the mouse pointer over the relevant data.

Configuration Software Display Windows

These are the windows shown on the PC display:

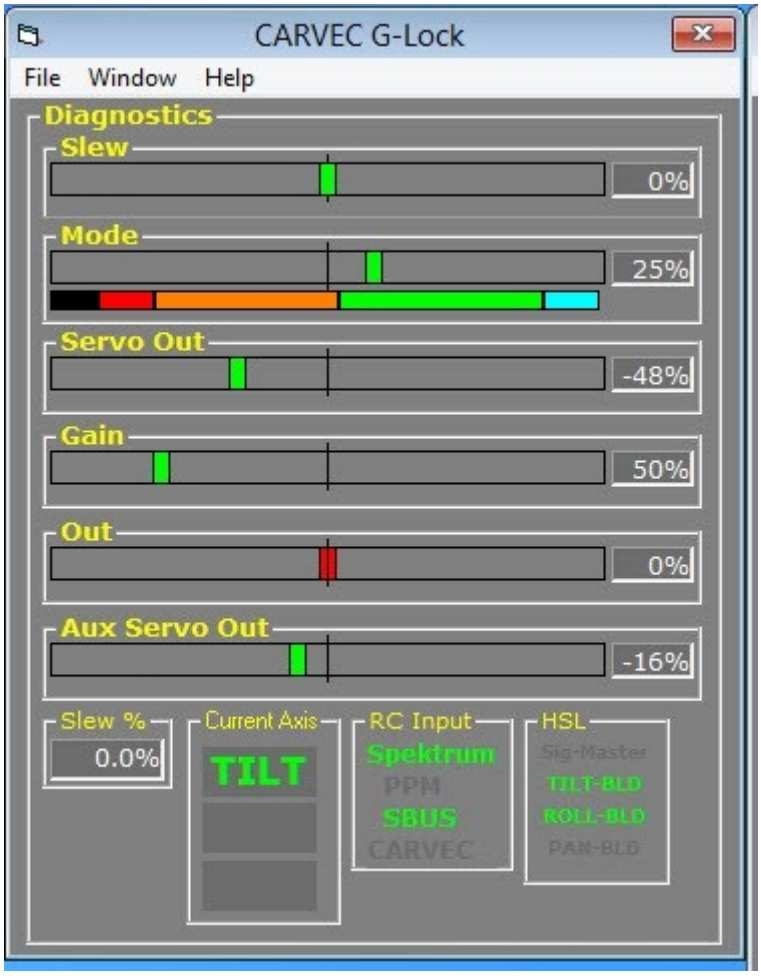

Figure 1 - The Status Display window

Figure 1 shows the status display window. This shows you what is happening with the input and output signals. The axis which is being shown is lit green.

To change the axis, simply click the desired button on the configuration window. It will change to green if the switch was successful.

The window also shows the validity of any modules on the HSL link and any RC Rx connected.

Slew: This bar shows the current slew channel input. When the slew control stick is in the centre position, the green indicator should be in the middle as shown. If it is not, adjust using subtrim until it is. If the indicator is red, the slew input is not valid.

Mode: The 'Mode' channel has separate coloured bands which indicate what mode the G-Lock is being commanded by the RC channel. The colours are: Red=Off, Orange=Fixed-Position, Green=Stabilised with slew control and Blue=Stabilised with Pan in 'Follow Mode'. If the indicator is red, the mode input is not valid.

Servo Out: This indicates the output drive to the servo motor for stabilisation. Note it is not necessarily the drive out from the G-Lock module (that is shown on the 'Out' indicator lower down) as it may be the case that a Signal-Master is being used. If this display goes red it means the output drive is turned off.

Gain : The current gain for the channel (which may be operated by RC remotely of the Gain RC channel is set on the configuration display).

Out : This is the actual servo output from the G-Lock (on Port#2 for the Tilt channel, Port#3 for Roll and Port#4 for Pan). If it is red, no servo pulse is being driven.

Aux Servo Out : The servo pulse being driven on Port#5 (shared with the PC link).

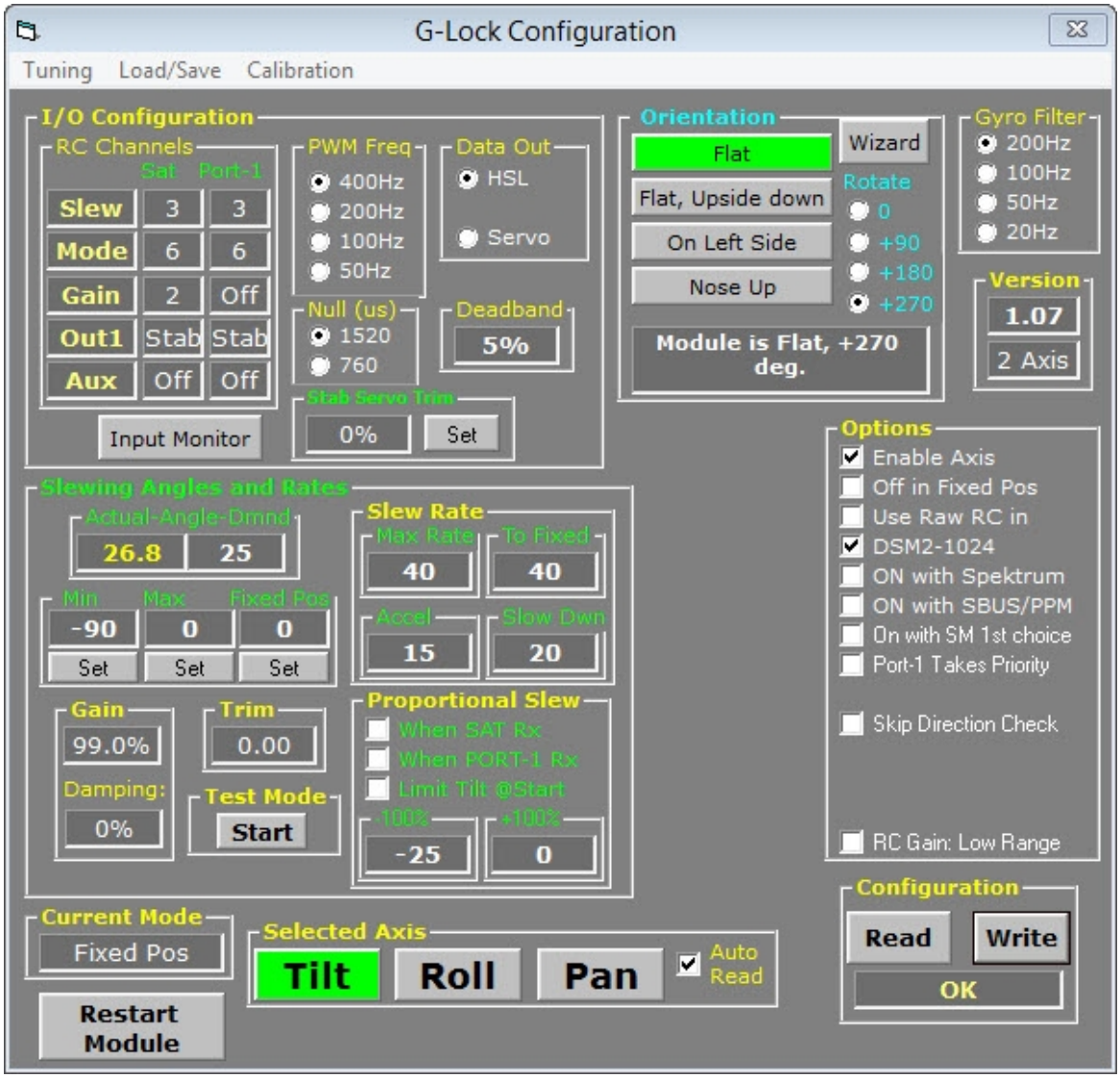

Figure 2 The Configuration window

Figure 2 is the configuration window which shows all the settings for an axis. When you click to change the axis, it will automatically read the settings from the G-Lock module and update the display. The button for the axis selected will change to green if it was successful.

Clicking an axis on this window will also automatically change the selected axis on the status display.

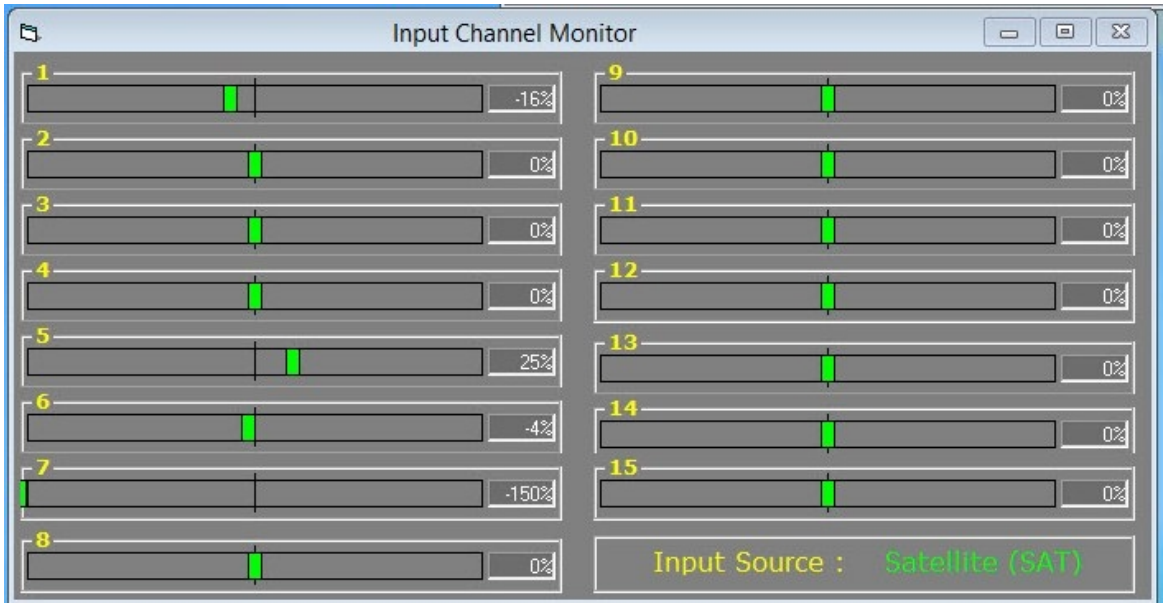

Figure 3 - The Input Channel Monitor window

Figure 3 is the input channel monitor and will show all the signals which are coming into the G-Lock module. This window is updated is real time, so you can move the radio controls + switches and be sure what the G-Lock is getting.

It also shows whether the data is from the Satellite port or Port#1 (SBUS/PPM). The priority of which one is shown can be changed with the 'Port 1 Takes Priority' selection on the configuration window.

This window is not shown by default. It is selected from the status window (figure 1) under the 'Window-> Input Channel Monitor' option.

Setting the Mode Channel

The mode channel should be set first to ensure the system can be put into the correct operating mode for testing.

Only one mode channel is used and it is configured using the Tilt on the Configuration window.

Click 'Tilt' on the Configuration window. It should turn green to indicate the config was successfully read from the G-Lock module. Now click the number next to 'Mode' and enter the channel you wish to use. You can set the channel independently for the Satellite input and the Port#1 input.

Remember you can open the 'Input Channel Monitor' window to see which switches to what in real time.

Click ‘Write’ after changing the Mode channel to apply the new settings to the G-Lock.

Configuration Window - General Settings

I/O Configuration Section

Note: All the RC channels can now be set independently for the Satellite input and the Port#1 input. Please see the section ‘RC Channel Selection and Priority’ for more details on how it works.

‘Slew’ – The input channel used for the slewing of the current axis.

‘Mode’ – (only visible for the Tilt axis). Selects the channel used for turning the stabilisation between ‘Off., ‘Fixed Position’ and ‘On’.

‘Gain’ – Selects the channel used to control the gain for the selected channel from the radio. Each channel has it’s own Gain channel setting. The current Gain can be seen in the main display window.

Note: If the RC signal for the gain channel goes all the way to -100%, the G-Lock will use the value stored in the config data. This allows a ‘safe’ value to be easily set but also allow changing it in-flight if required.

‘Out’ : This box selects what output used to drive the servo output for this axis. It can be the ‘Stabilisation’ drive to the servo motors or it can be set to be any of the input channels. Out1 is on G-Lock Port-2 (Tilt axis), Out2 is Port-3 (Roll axis) and Out3 (Pan axis) is on Port-4.

This allows an unused output to be configured as a general PWM output – eg for camera triggers.

Note: When the HSL is selected in the ‘Data Out’ section (only shown when the Tilt channel is selected), Out2 and Out4 (Tilt and Pan servos respectively) are dedicated to the HSL bus and hence only Out3 is available for servo output (eg as a camera trigger).

Aux : (only visible for the Tilt axis) – General purpose servo output on Port#5 which can be used for a camera trigger when a 3-axis servo mount is being used.

The PWM output for each channel can be configured for pulse rate and pulse’null’ using the settings next to the channel configuration.

‘Deadband’ defines the region around the stick centre where the input is ignored.

‘Data Out’ (Only when Axis 0 selected). This defines the function of the OUT3 port (also used for the Pan servo). Select ‘HSL’ if the module is being used with a Signal-Master module or else ‘Servo’ for a PWM output.

‘Stab Servo Trim’ : This can be used to offset the centre point for the servo output pulse. Normally this is done automatically, but if the resistor-pack for the servo is not correct then a large offset might be needed to compensate. The automatic range will allow a null range of +/-20% from the optimal null.

To check this, turn on the mount and let it initialise and settle to the fixed-position then look at the ‘Out’ pulse value on the Status Display window. If it is less than about 20% then the automatic function is OK. However if it is more than that the software can be trimmed so it initialises more accurately. To do this, simply click the ‘set’ button and the current ‘Out’ drive will appear in the box. Writing the config will change it in the G-Lock.

Slewing Angles and Rates section

‘Actual-Angle-Dmnd’ boxes show the angle the G-Lock module is actually at and also the angle it is trying to get to. This is a useful tool because it also allows you to check the G-Lock is configured for the correct sensing axis.

‘Min Angle’, ‘Max Angle’ and ‘Fixed Pos’ are the maximum, minimum angles and the angle where the axis is driven for the ‘fixed position mode’.

These must be set for ‘No Limit’ and ‘Hold’ for the pan channel for normal operation.

Slew Rate

‘Max Rate’ : This is the maximum rate the slewing will go – regardless of the stick input

‘To Fixed’ : This is how fast the mount will drive back to the fixed position.

‘Slew Rate’ : ‘Max Rate’ defines the maximum speed the mount will move for operator slewing and ‘To Fixed’ defines how fast it will drive back to the fixed position.

‘Accel’ and ‘Slow Down’ are used to configure new smooth-slewing function. The Accel function makes the slewing smoother whilst the ‘Slow Down’ is used to compensate for overshoot when in fixed-position mode.

‘Accel’ has a useful range of about 10 (very slow) to 100. When ‘Accel’ is changed, the slowdown angle is also automatically calculated, but can be adjusted if the mount overshoots when driving to a fixed position.

Slewing Mode

‘Proportional Slew’ : this is where a shoulder lever or dial is used to position the camera

and an absolute positon instead of incremental slewing on a spring-stick. The G-Lock allows you to set an axis as ‘proportional’ separately for each receiver input.

If either of these boxes are checked, the axis will work in proportional mode when the slew is being used for the specified receiver input. In this mode, the +100% and -100% values of the input signal relate to the two values in the ‘max’ ‘min’ boxes underneath.

For example, if the slew channel for the axis is mapped to be a shoulder lever (or face dial), and then the ‘max’ and ‘min’s are set to +0 and -90 degrees then moving the lever (or dial) through the full range will cause the axis to change between horizontal and vertically down.

This is especially useful for single operator cameraships. You can have a pilots input using proportional mode on a shoulder lever for single-operator which switches automatically to incremental slewing when a second operator turns on their spectrum radio.

If ‘Limit Tilt At Start’ is checked then the axis will stay at the ‘Fixed Position’ until the lever or dial is moved to an angle greater than the fixed position.

This feature is to prevent the axis powering up to an unwanted angle (eg vertically down) until the control has been moved to horizontal. This can prevent the camera lens hitting the ground before takeoff when there is not much ground clearance.

Test Mode

The test mode is used to automatically drive the gimbal between the two angles set for the Proportional Mode slewing (in the ‘Slewing Mode’ sub-window). It will accelerate and slew using the slew rate and accelerations in the ‘Slew Rate’ sub window just above.

Note: The two angles must be inside the max/min angles programmed for the axis otherwise the ‘Test’ mode will hang at one end of the movement.

Options

‘Enable Axis’ : When this is clear, the PWM output for an axis will not be driven.

This is very useful to disable 2 of the 3 axis while configuring and tuning the third. It is easier do set up one axis at a time.

‘Off in Fixed Pos’ : Disables the stabilisation PWM drive when the mount is in ‘Fixed Position’ mode. This is most useful for the Pan axis to avoid the mount turning before it is airborne.

‘Use Raw RC In’ : Normally, PPM and Spektrum channels are rearranged to match input functions across different radio systems (eg so aileron stick is the same channel for all). If a Signal-Master module is used, all the selections and rearrangement is done there – so this option should be unchecked to avoid confusion.

‘DSM-1024’ : Check this box when using a Spektrum satellite Rx which is set for DSM-1024 operation. Leave it clear for DSM2-2048 and DSM-X systems.

‘On With Spektrum’ : causes an axis to be disabled unless it’s control is coming from the Spektrum port. This is useful for a dual-operator setup where the camera-operator uses a Spektrum radio.

‘On With Port 1’ : Similar with ‘On with Spektrum, but this time the axis is disable unless it’s slew control is coming from the Port-1 Rx (SBUS/PPM).

‘On with SM 1st choice’ : this is similar to the ‘On with Spektrum’ option, but is for when using an external Signal-Master module. When this option is set, the axis will be turned off if the source is not the 1st choice selection in the signal-master module. It enables an axis to be Off when controlled from one radio but on when controlled from another (eg dual operator setup).

‘Port-1 Takes Priority’ : Normally, when the Satellite Rx is active, it takes priority over any input on Port-1. This option allows that to be reversed. This is normally useful when the 2nd operator is using an SBUS/PPM radio and the pilot .

‘Skip Direction Check’ – For servo driven gimbals, the G-Lock does an automatic direction check for the motors when the axis is switched on. This results in a small jump as the test is done. The motor direction for brushless gimbals is set in the BLD software configuration and so the test is pointless. This option allows it to be disabled.

‘RC Gain: Low Range’ – normally the RC gain has a range of 10% to 250% which is the usual range when using RC servos. If this option is set then the range changes to 80%..120% which is more useful when using it to fine tune a channel driven by a brushless drive module.

Additional Options for the Pan Channel

When the Pan channel is selected, the config display looks like this:

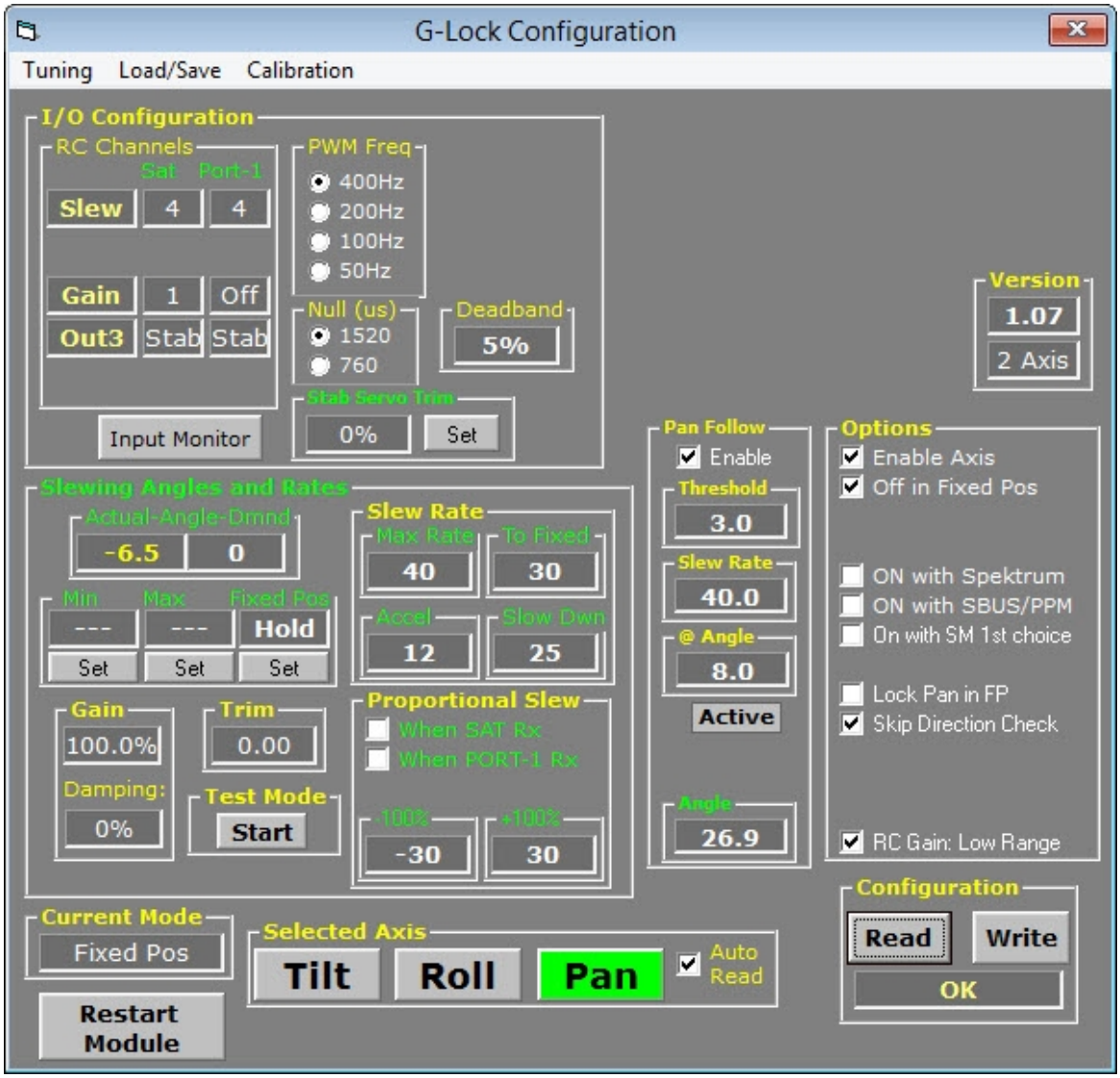

The main difference is the ‘Pan Follow’ section and the ‘Lock Pan in FP’ option.

When ‘Pan Follow’ is enabled, the pan will automatically smooth movement, but track to keep the same direction relative to the aircraft. Note that it will follow at whatever angle it is at when the mode is engaged.

Note: This function will only work when using a CARVEC BLD module on a brushless Pan drive gimbal.

The ‘Lock Pan in FP’ option will cause the drives to the brushless motor to ‘freeze’ and hence hold the pan axis at the current position. It is provided as an alternative to the ‘Off in Fixed Pos’ which turns the motor drive off completely. Note that the position is not ‘locked’ like the stabilisation mode and the axis might move or oscillate a little until it settles down.

This mode is usually used on a gimbal where the landing gear rotates with the pan axis and hence will spin the aircraft if stabilisation is engaged whilst on the ground. When a brushless axis is ‘off’, it offers very little resistance to spinning on it’s own and this provides a way to hold it stationary.

Restart

Clicking this button will cause the module to do a reset without having to disconnect power. It is recommended to do this after changing the config as many settings do not apply until the module is restarted.

Sw Version

This box shows the current G-Lock software version and whether this is a 2-axis or 3-axis system.

RC Channel Selection and Priority

From software version 1.06, the G-Lock allows the channel selection for the Satellite input and the SBUS/PPM receiver on Port-1 to be selected individually to give more flexibility for single/dual operator setups.

The configuration window shows the selections as follows:

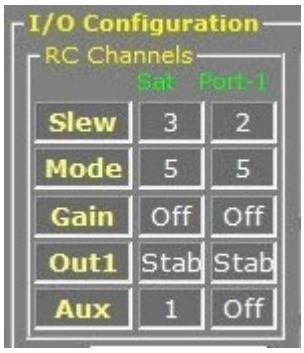

If both the Satellite and Port-1 inputs have valid data (ie 2 receivers are active) then normally the Satellite signals will be used over the Port-1 signals. This priority can be reversed with the 'Port-1 Takes Priority' option which changes it so that Port-1 will take priority.

If a channel signal selection is set to 'Off' then the other receiver will be used all the time. For example, if the Mode is set to 'Off' for the 'Sat' input then it will always use Port-1 even when the satellite is valid. This could be used for example to have the operating mode controlled by the pilots radio at all times.

To completely disable a function (eg for the slew channel on the roll axis) then set both values to 'Off'.

Preconditions

The G-Lock expects all servos to be modified to 360 degree rotation and have fixed resistors fitted instead of the normal feedback pot.

Make sure you have a power supply capable of supplying the required current to the servos without causing a G-Lock brownout condition. This happens if the voltage drops below 2.2v. If the G-Lock appears to reset or behave erratically then this is a likely cause.

Mount the G-Lock to the gimbal

Choose the mounting point for the G-Lock module. The G-Lock is an on-axis stabilisation system and so must be mounted on the axis it is stabilising.

The available orientations of the module are shown on the configuration window of the PC app. Hold the mouse pointer over each one to see a more detailed description of how to mount the module. Clicking the 'Wizard' button will show a graphical representation of each orientation.

NOTE: The Orientation is set along with the 'tilt' channel configuration. It is not visible if the roll or pan axis are being configured.

After the G-Lock is mounted, you should verify the movement of each axis as described in the Q&A section.

Disable unused axis

It is best to concentrate on one axis at a time, so uncheck the 'Enable Axis' option for the others as you set up each one.

Set the Slewing Mode

If you want to use rate-slew (ig from a spring loaded stick) then make sure the 'Absolute slew mode' box is NOT checked. Check the box if you want to control the axis from a shoulder-lever or dial-type control.

Select the Input Channels from the radio

If you are using a CARVEC Signal-Master module, the first step is to configure the Signal-Master so that all of your selected Radio control channels come into the G-Lock module as channels 1 (for Tilt), 2(for Roll) 3 (For Pan) 4 (For Mode).

If you are not using the Signal-Master module, connect your radio and use the 'Input Channel Monitor' window to choose which channel to use for the slew control.

Note: The mode channel is selected on the configuration for axis 0 (Tilt). It is usually a good idea to do this axis first.

Power-up and Tune

If everything is set properly and power applied, the G-Lock should automatically find the direction to drive the motor and slew the axis to the 'fixed position'.

It is now a case of adjusting the axis gain to get the desired response.

A radio channel can also be used to adjust the gain remotely. Refer to the Q&A section for details.

Note: If the BLD modules is being used, the motor direction is set directly in the BLD PC App (not covered here).

Guide to Setting Up a G-Lock with a CARVEC Signal-Master Module

When using a Signal-Master module,the best way to set the system up is to do the Signal-Master module first, then the G-Lock module second.

The purpose of the Signal-Master module is to connect to the RC receiver/s and allow you to select which signals go out to the G-Lock module. Then it takes the servo drives back from the G-Lock and generates the PWM outputs for the servo motors.

This section just gives the basic steps : please see the user manual for the Signal-Master module for the specific details.

1 :

Load a predefined G-Lock configuration for your receiver into the Signal-Master module (they can be found through the CARVEC forum at www.xxx.xxx.xxx)

2 :

Connect up your RC Receiver/s to the Signal-Master module and use the Signal-Master PC software to decide which of the input channels you want to use for the tilt, roll and pan control. Also determine which channel to use for the gimbal 'Mode' switch. This is usually a 3-position switch which goes from -100% to 0% to 100% (approximately).
3 :

Assign the control channels to the secondary output as follows:

‘Tilt Slew’ to output channel 1
‘Roll Slew’ to output channel 2
‘Pan Slew’ to output channel 3
‘Mode’ to output channel 4

You might want to also assign a shoulder lever type control to output channel #5 to give the option of ‘proportional’ tilt control later.

You can also assign other switches into the output channel here (eg for a camera trigger). If they are sent to the G-Lock, they can be used on the 2 spare PWM outputs if desired to avoid running extra wires onto the gimbal.

As you move the radio controls, check the ‘secondary output’ channel indicator bars are moving with them. This is confirming the outputs from the Signal-Master are set and we can move on to the G-Lock.

4 :

Connect the Signal-Master to the G-Lock as shown in the diagram in Appendix B. Now connect the G-Lock to the PC and run the G-Lock software. Click ‘Connect’ for the Tilt axis (on the configuration window) and verify the ‘Tilt’ label goes green on the main window showing the module is connected and working.

When the ‘Tilt’ goes green, the box ‘HSL Valid’ should be checked showing the two modules are communicating.

5 :

Open the ‘Input Channel Monitor’ window so see the input signals to the G-Lock module then turn on the RC Tx. As you move the sticks, the input channels should change just as they did on the Signal-Master window earlier.

Now go through each axis (Tilt/Roll/Pan) using the configuration window. For each one:

If necessary, you can click ‘Default->Reset Axis To Factory Defaults’ to initialise the axis data. You must do this for each axis the first time you use a module after it has been upgraded to a G-Lock from a Radian.

Set the slew channel to the appropriate choice as seen in the ‘Input Channel Monitor’ window.

When setting the Tilt channel, also set the ‘Mode’ channel. You can also set the orientation for the module : click the ‘Wizard’ button to see the available choices.

6 :

Now you can tune each axis of the G-Lock. It is easiest to do these one at a time. Uncheck the ‘Enable axis’ option for the Roll and Pan axis to just leave the tilt axis.

Connect the tilt axis servo to the Signal-Master module port 10.

Now tune/setup the axis as desired.

When the Tilt axis is OK, check the ‘Enable Axis’ for the Roll axis and tune/setup as desired. The servo for Roll goes into Port 11 of the Signal –Master module.

Finally do the same for the Pan axis (Port 12 on the Signal-Master).

Please refer to the other sections in this document to learn what options are available.

If you have problems, please refer to the ‘Common Problems and Solutions’ section or the online forum at carvec.proboards.com.

FAQ

What is the operating voltage for the module ?.

The module will operated from any voltage from 3.5v to 12 volts without damage and so can run off a 3S LiPo pack directly.

** Be sure your servos are capable of handling the voltage you intend to use **

Momentary connection of any voltage up to 25 volts (6S) will not damage the module, but prolonged operation will exceed the power dissipation capability and result in failure.

How do I check the G-Lock is configured correctly for the way I have mounted it ?

This can be done by looking at the 'Current Angle' in the configuration window.

With the servos disconnected, select each axis in turn and check the angle changes as you move the mount by hand. The angle should change as follows:

Click 'Connect(Tilt) on the Status window and check it turns green. The 'Current Angle' on the Configuration window now shows the G-Lock tilt angle.

Check that the angle goes negative as the tilt axis is tilted nose down and positive as it tiltes nose-up.

Now repeat the 'Axis1 (Roll)'. For this axis, the Current Angle should go positive as you roll the gimbal 'right-wing low'.

Finally repeat for 'Axis2 (Pan)'. The angle should go more positive as you rotate the gimabl *clockwise*. It will wrap at 360 degrees back to zero degrees.

How do I use a dial on the radio to adjust the gain in real-time ?

If you want to change the gain remotely, assign the required radio channel to the 'Gain' on the configuration window (be sure to select the required axis first). The operation of the 'Gain' control can be verified on the Status display.

Note that if the gain control is reduced to the minimum (ie the RC pulse input is < -90%), the gain used will be from the configured gain instead. This means that turning the dial fully down effectively turns off the remote gain function.

When the correct gain has been found, you can leave the dial in the right position then connect the G-Lock PC software and read off the gain from the Status display (be sure to select the desired axis). You can enter this % into the actual config data for the axis and disable the external gain control (or use it for setting up another channel).

When using the RC gain feature for an axis driven by the brushless system, the RC gain modifies the BLD gain to allow fine tuning of the overall gain programmed into the BLD module. For example, if the BLD gain is 200% and the G-Lock gain is set at 60% then the actual gain used by the BLD module will be (60% of 200%) = 120%.

The G-Lock gain for the axis should normally be set at 100% for tuning the brushless motors (so it does not affect the BLD module gain) then the G-Lock can be used for fine tuning later.

For tuning a servo gimbal, the range of the RC gain is 10% to 250%. If the option 'RC gain : low range' is set then this is changed to be 80%..120% which is more useful for fine tuning a BLD drive.

How Do I Reset a G-Lock to the Factory-Defaults ?.

Loading in a new configuration file resets all parameters.

You will find a default configuration file at the support forum carvec.proboards.com.

Common Problems & Solutions

When I operate the tilt, the roll axis also changes slightly.

The G-Lock module needs to be mounted accurately in it's selected orientation. If it is not, the roll axis may pick up some movement of the tilt axis.

To check the roll axis alignment, disconnect the servo motors and connect the module to the PC. Now click to select the 'Roll Axis'.

Next operate the tilt axis by hand through the normal range of operation. If the module is not quite straight, you will see the roll axis angle change a little bit in a uniform way.

The module position needs to be adjusted to minimise this cross sensing.

I am not using a Signal-Master module and I am not getting any Pan or Tilt servo output

Check the module is not configured for HSL output (click the 'Tilt' axis and ensure 'Data Out' is 'Servo') and also check that when the 'Pan' axis is selected, the 'Out' servo selection is set at 'Stab'

The gimbal servos drive constantly as soon as I apply power to the Signal-Master module

The servo outputs for the Signal-Master are not set to be driven by the HSL inputs from the G-Lock. Make sure you have loaded a G-Lock config into the SM module.

If the config is loaded, check the servos are connected as in the above diagram.

I can't see any input from the G-Lock on the Signal-Master display

Make sure a G-Lock config has been loaded into the Signal-Master. The G-Lock signals should appear in channels S:01, S:02 and S:03 of the secondary channel inputs.

If they do not, check that the G-Lock module has been configured to be HSL output on Port-4 (This is done using the G-Lock PC configuration program : on the configuration window, click the 'Tilt' axis and an option appears in the IO Configuration section).

Appendix A – Wiring diagram for a standalone G-Lock

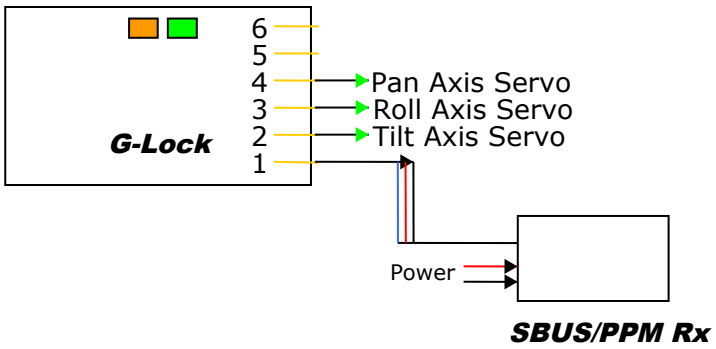

Notes:

- If a Spektrum satellite is being used, Port 1 can be used directly for power
- Ports 5+6 may be used for power also, but obviously the PC cable cannot be connected at the same time. During setup, one of the servo ports for a different axis could be used.
- If less that 3-axis are being used, the unused servo port can be used for power.
- The cable from the Rx to the G-Lock must be heavy duty enough to supply the power for all the servos being used.

Appendix B – Wiring diagram for the G-Lock with a CARVEC Signal-Master module

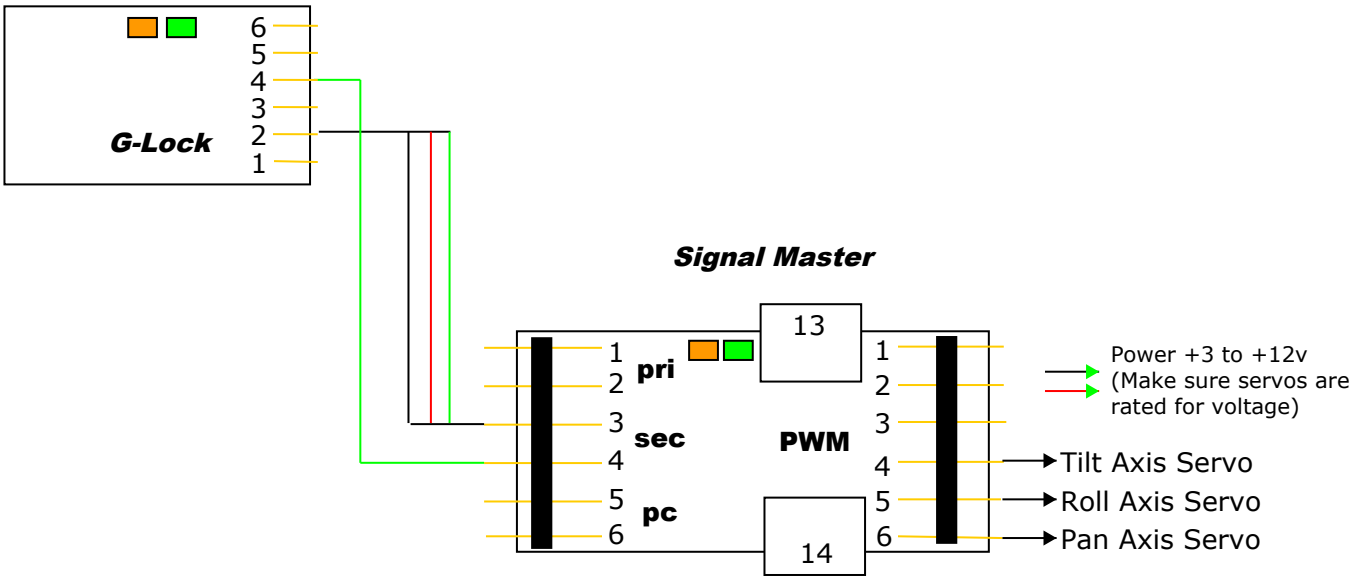

When the Signal-Master module is used, only 4 wires are required to connect to the G-Lock module.

The G-Lock should be configured for 'HSL' in the 'Data Out' box (only displayed when axis '0(Tilt)' is selected in the Configuration window.

Appendix C – PC connection using the CARVEC USB Adapter

Adapter hardware connection and pin-out

The CARVEC USB Adapter uses a high quality FTI chipset to provide a reliable data connection across all windows operating systems, both 32 and 64 bit.

Dongle	Module
Out	Port 4
In	Port 5
Gnd	Gnd

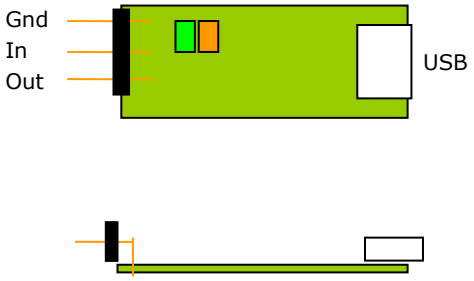

NOTE: Do not connect the adapter directly to any RS232 device. The module may be permanently damaged.

Configuring the Adapter to automatically install as COM10:

The RC Signal master module will attempt to connect to COM 10 when it starts. If there is no COM port10 then an error will result. It is useful to configure the module to always install as COM10. This is done as follows:

1) First connect the module and allow windows to automatically install the device driver.
2) When it is finished, go to the 'Control Panel' (Windows 7: from the start menu, Windows 8: Put the mouse pointer in the lower left of the screen, right click the mouse and select 'Control Panel'
3) From the control panel, click 'Device Manager'
4) In the device manager window, click 'Ports(COM & LPT) to expand it and there should be a 'USB Serial Port (ComX)' where X is a number assigned by the operating system.
5) Right-click the 'USB Serial port' then left-click 'Properties'
6) In the properties window, click the 'Port Settings' tab

7) Next click the ‘Advanced’ button
8) In the COM port number, use the drop-down box and select COM10.
9) Now click OK. If windows gives you any warning, just click ‘Yes’ to continue.

Now each time the USB Adapter is attached, it should come up as COM10. However if you plug it into a different USB port it may go back to another number – so this procedure needs to be repeated.

Changing the PC software to use a different COM port

As an alternative to using the above method, the PC software can be simply changed to match the COM port of the dongle. You need to know what COM port number the operating system has assigned by opening the control panel as described in the previous section.

On the main PC display click Window->Comms Port’. A window will appear which allows you to select the associated COM port.

Verifying the PC software connection

Using the 3-pin to 6-pin cable supplied with the USB Adapter, connect the G-Lock PC connection pins to the ‘TTL’ row of pins on the dongle. Also connect the Dongle to the PC using the USB lead.

Now run the G-Lock software on the PC. It should start without any error messages. If it complains about the COM port, check all the settings above (for COM10: configuration) and try again.

Now power up the Radian and click the ‘Connect (TILT)’ button. The button should turn green along with the servo+gain indicator bar markers.

This indicates successful connection.

Appendix D – Entering bootloader mode for firmware upgrade

To place the module into bootloader mode to enable a firmware update using the CARVEC bootloader system, please short together the top pins of Ports 5 and 6 of the G-Lock (Radian) then power on the module.

Entry into bootloader mode is signalled by both LEDs immediately lighting solid.

The module is now ready to be updated. Please see the documentation for the CARVEC bootloader system for further details.